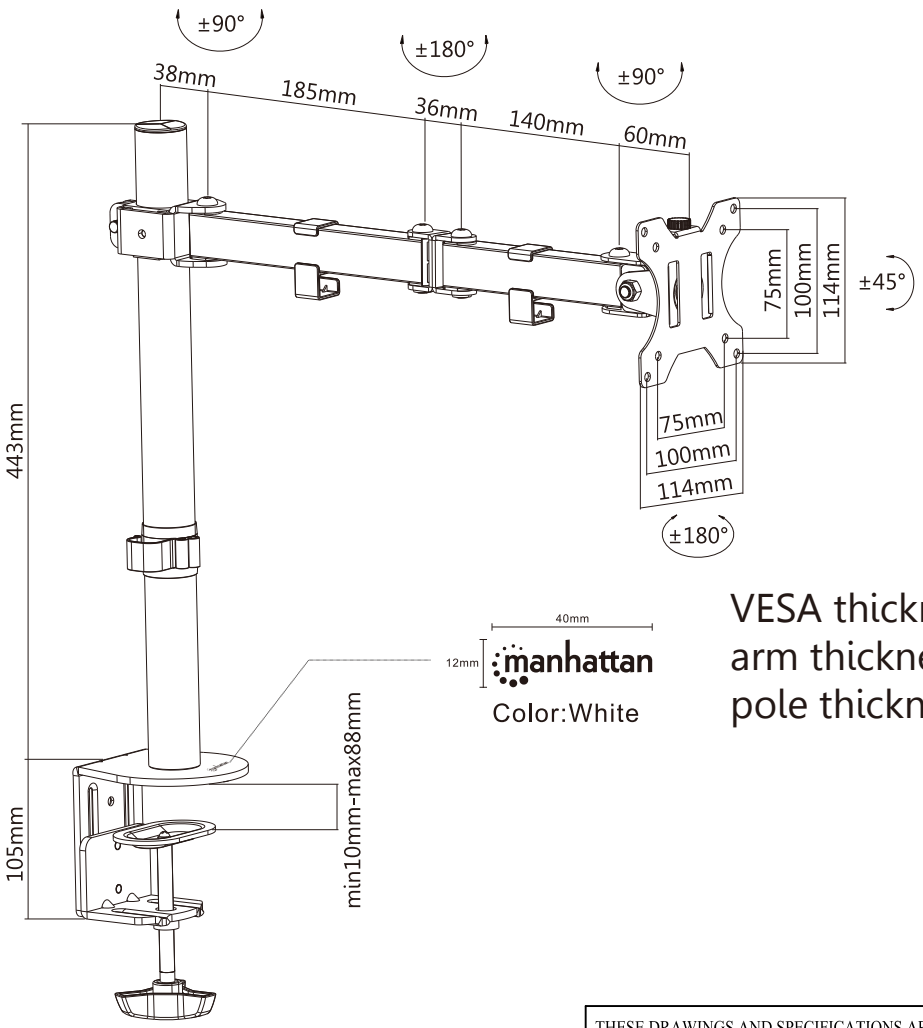

VESA thickness: 1.8mm
arm thickness: 1.5mm
pole thickness: 2.0mm

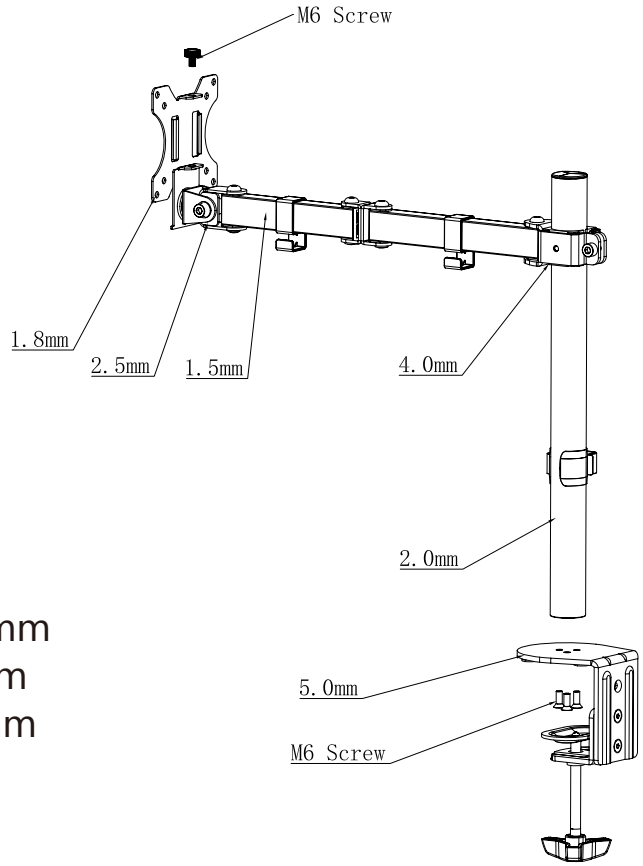

THESE DRAWINGS AND SPECIFICATIONS ARE THE PROPERTY OF INTRACOM Asia Co.,Ltd. AND SHALL NOT BE REPRODUCED COPIED OR USED IN ANY MANNER WITHOUT THE PRIOR WRITTEN CONSENT OF INTRACOM Asia Co.,Ltd.

UNLESS OTHERWISE SPECIFIED:DIMENSIONS ARE IN MILLIMETERS ANGULAR TOLERANCE:±1°

	TOLERANCE(MM)
Mounting Profile	±5mm
Product Size	±2mm
VESA	±1mm

INTRACOM 安達康股份有限公司 INTRACOM Asia Co.,LTD.

TITLE: Monitor Desk Mount	APPD		VID	V101824
	Check	WHJ		
CUSTOMER:	Drawer	HSJ	Date 2017.09.27	
CUSTOMER P/N:	Unit	mm	Projection	
ICT P/N: 461542	Scale	1:1	Size.	A4
DWG.NO:	Sheet	1 of	REV.	C