ACE Series

Automatic Coffee Brewer: Glass Decanter, Thermal Carafe, Thermal Dispenser, & Thermal Airpot

ACE-LP

ACE-S

ACE-TC

ACE-TD

ACE-TS

ACE-LD

ACE-AP

Spare Parts Catalog

ACE Series

Automatic Coffee Brewer: Glass Decanter, Thermal Carafe, Thermal Dispenser, & Thermal Airpot

Flow Control Information for PDS [Legacy (Old Style) - PN: 110305]

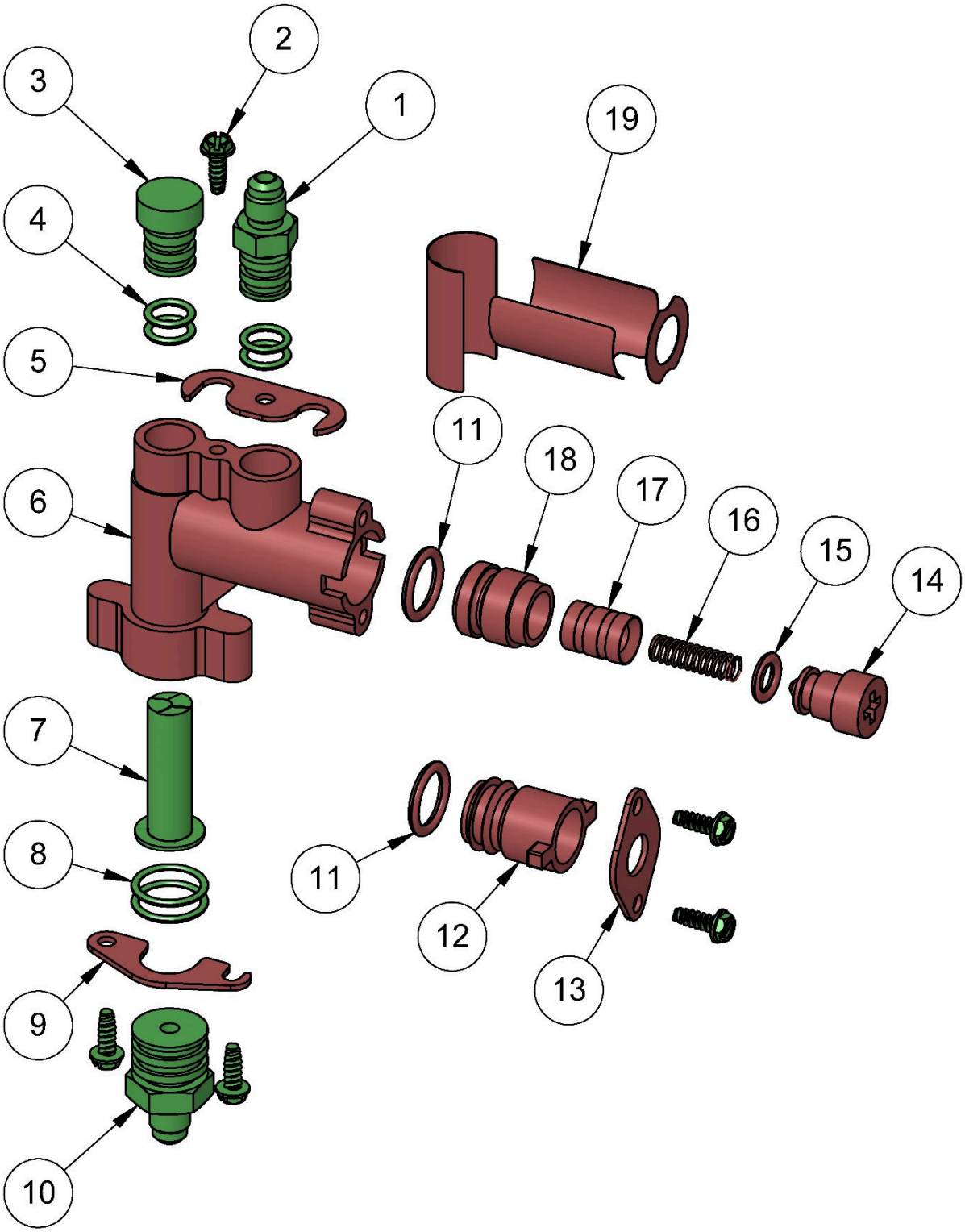

ACE Series

Automatic Coffee Brewer: Glass Decanter, Thermal Carafe, Thermal Dispenser, & Thermal Airpot

PDS Flow Control Valve Legacy [Old] Style and SPDS Flow Control Valve New Style Parts. **Note:** ***Green*** Colored Parts are Interchangeable between PDS & SPDS Valves. ***Red*** Colored Parts Are Not.

Item	Part Number	Description
1	110220	ADAPTER, 1/4" FL X 1/2" WITH "O"-RING [O-RINGS INCLUDED]
2	110223	SCREW, 8 X 1/2" SS HEX HEAD
3	110108	PLUG, 1/2" "O"-RING ["O-RINGS' INCLUDED]
4	110218	"O"-RING, 3/8" ID X 1/2" OD
5	110580	RETAINER, OUTLET FITTING – 16 GA.
6	110217	BODY, FLOW CONTROL – PDS
7	110114	FILTER SCREEN, SS
8	110219	"O"-RING, 5/8" ID X 3/4" OD
9	110109	RETAINER, INLET FITTING
10	110221	ADAPTER, 1/4" FL X 3/4" "O"-RING ["O"-RING INCLUDED]
11	110213	"O"-RING, 9/16" ID X 3/4" OD
12	110216	BONNET, ADJUSTMENT LOW FLOW PDS ["O-RING NOT INCLUDED]
13	110098	RETAINER, BONNET PDS – 16 GA.
14	110222	PLUG, FLOW ADJUSTMENT ["O"-RING NOT INCLUDED]
15	110214	"O"-RING, 5/16" ID X 1/2" OD
16	110101	SPRING, LOW FLOW PDS
17	110116	PISTON, LOW FLOW PDS ["O"-RING NOT INCLUDED]
18	110117	SLEEVE, PDS ["O"-RING NOT INCLUDED]
19	110102	LABEL SET, PDS VALVE [3 PIECES]

TIMER SETTING REQUIRED TO OBTAIN DESIRED VOLUME									
DESIRED	RED INDICATES LOW FLOW				GREEN INDICATES HI FLOW				
VOLUME IN GPM	0.175	0.200	0.220	0.250	0.300	0.350	0.500	0.750	1.000
BREW TIME FOR:									
1 LITER	91	79	71	63	53	45	32	21	16
64 OZ.	171	150	136	120	100	86	60	40	30
72 OZ.	193	169	153	135	113	96	68	45	34
2.2 LITERS	199	174	159	139	116	100	70	46	35
2.5 LITERS	226	198	180	159	132	113	79	53	40
BREW TIME SHOWN IN SECONDS									

ACE Series

Automatic Coffee Brewer: Glass Decanter, Thermal Carafe, Thermal Dispenser, & Thermal Airpot

Flow Control Information for PDS [New Style – PN: 330538]

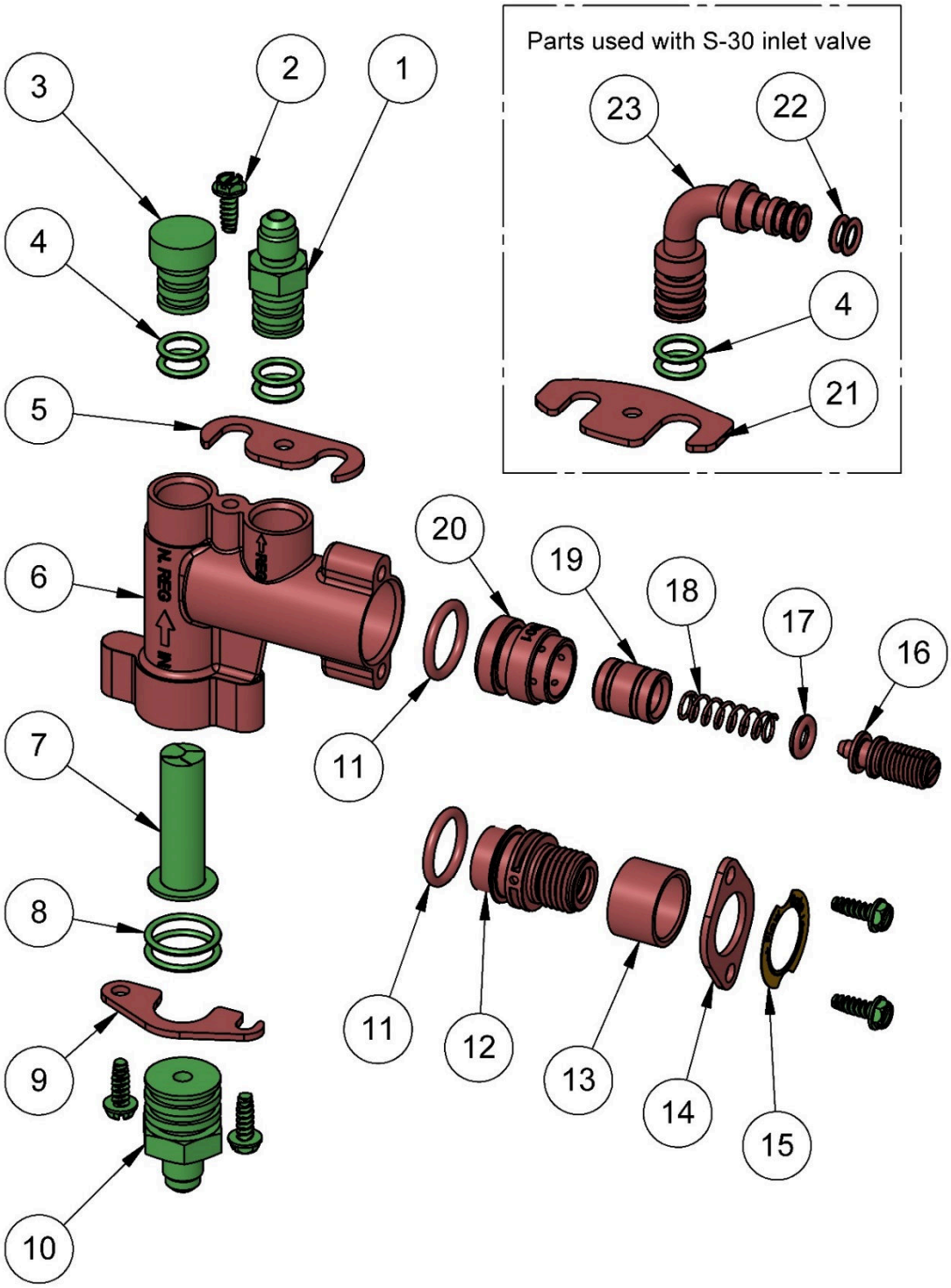

NEWCO

ACE Series

Automatic Coffee Brewer: Glass Decanter, Thermal Carafe, Thermal Dispenser, & Thermal Airpot

PDS Flow Control Valve Legacy [Old] Style and SPDS Flow Control Valve New Style Parts. **Note:** ***Green*** Colored Parts are Interchangeable between PDS & SPDS Valves. ***Red*** Colored Parts Are Not.

Item	Part Number	Description
1	110220	ADAPTER, 1/4" FL X 1/2" WITH "O"-RING [O-RINGS INCLUDED]
2	110223	SCREW, 8 X 1/2" SS HEX HEAD
3	110108	PLUG, 1/2" "O"-RING ["O-RINGS' INCLUDED]
4	110218	"O"-RING, 3/8" ID X 1/2" OD
5	330571	RETAINER, SPDS OUTLET FITTINGS – 14 GA.
6	330548	BODY, FLOW CONTROL – SPDS
7	110114	FILTER SCREEN, SS
8	110219	"O"-RING, 5/8" ID X 3/4" OD
9	330572	RETAINER, SPDS INLET FITTINGS – 14 GA.
10	110221	ADAPTER, 1/4" FL X 3/4" "O"-RING ["O"-RING INLUDED]
11	800002	"O"-RING, 5/8" ID X 13/16" OD
12	330579	BONNET, FLOW ADJUSTMENT SPDS ["O"-RING INCLUDED]
13	330547	SLEEVE, BONNET SPDS
14	330563	RETAINER, BONNET SPDS – 14 GA.
15	330573	LABEL, FLOW RATE ADJUSTMENT SPDS
16	330580	PLUG, FLOW ADJUSTMENT ASSEMBLY – RED/LOW ["O"-RING INCLUDED]
17	330564	"O"-RING, 1/4" ID X 7/16" OD
18	330545	SPRING, LOW FLOW – SPDS
19	330543	PISTON, LOW FLOW – SPDS
20	330577	SLEEVE ASSEMBLY, SPDS ["O"-RING INCLUDED]
21	330570	RETAINER, SPDS OUTLET – 1ST RUN 330541 [OTHER USE 110580]
22	330509	"O"-RING, 1/4" ID X 3/8" OD
23	330574	ELBOW, 3/8" "O"-RING X 1/2" "O"-RING [INCLUDES 4 "O"-RINGS]

TIMER SETTING REQUIRED TO OBTAIN DESIRED VOLUME									
DESIRED	RED INDICATES LOW FLOW				GREEN INDICATES HI FLOW				
VOLUME IN GPM	0.175	0.200	0.220	0.250	0.300	0.350	0.500	0.750	1.000
BREW TIME FOR:									
1 LITER	91	79	71	63	53	45	32	21	16
64 OZ.	171	150	136	120	100	86	60	40	30
72 OZ.	193	169	153	135	113	96	68	45	34
2.2 LITERS	199	174	159	139	116	100	70	46	35
2.5 LITERS	226	198	180	159	132	113	79	53	40
BREW TIME SHOWN IN SECONDS									

ACE Series

Automatic Coffee Brewer: Glass Decanter, Thermal Carafe, Thermal Dispenser, & Thermal Airpot

ACE Tank Assembly, Legacy [Old Style]

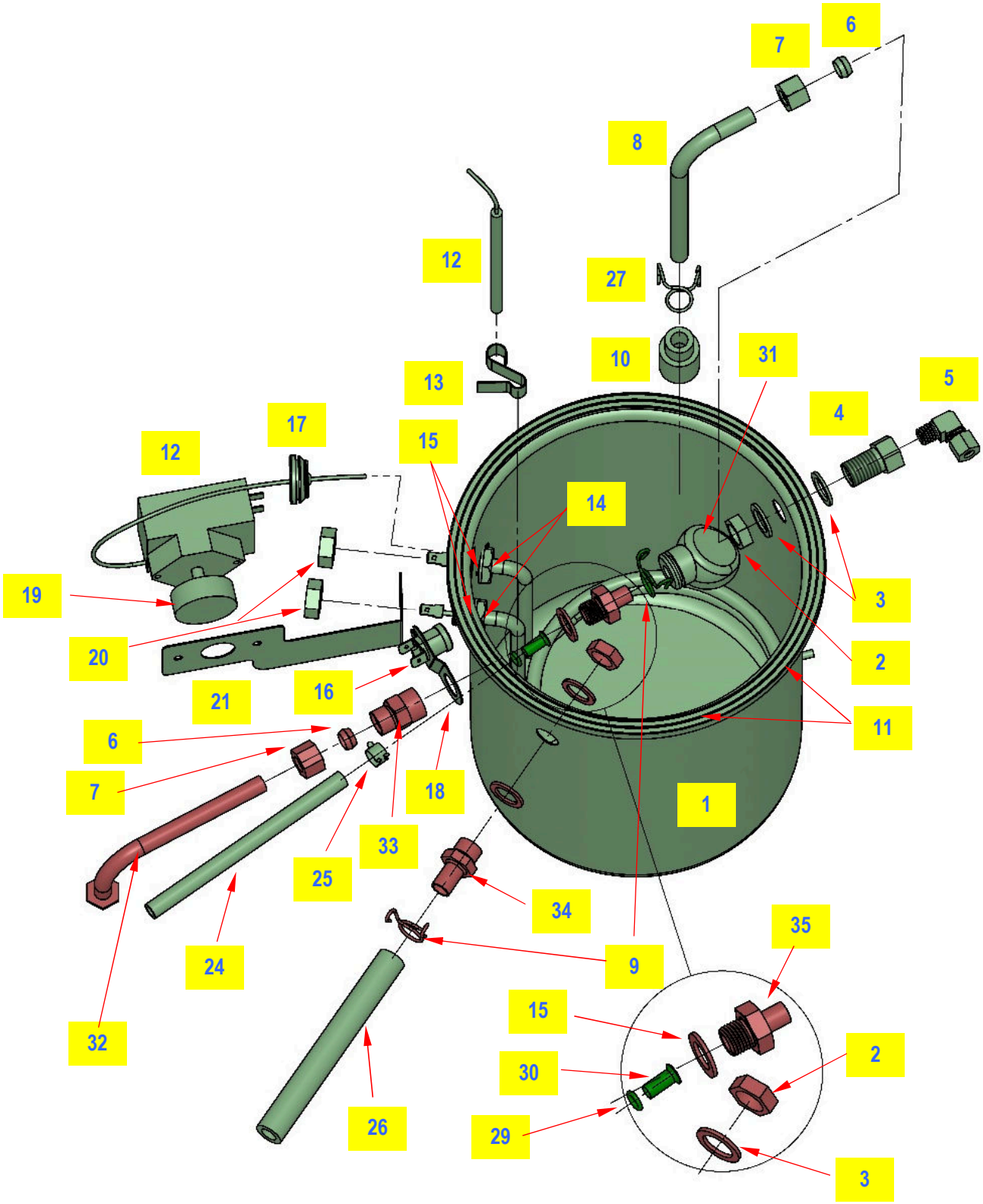

ACE Series

Automatic Coffee Brewer: Glass Decanter, Thermal Carafe, Thermal Dispenser, & Thermal Airpot

ACE Tank Assembly, Legacy [Old Style]

Item	Part No.	Description
1	102797	TANK, SPOTWELD FAUCET – ACE SERIES
2	100431	NUT, 9/16-24 X 11/16” HEX
3	100030	BRASS GASKET, .566” ID X .811” OD X .064” THICK – TINPLATED
4	102831	FITTING, 3/8” C X 1/8” NPT
5	100149	MALE ELBOW, 1/4" C X 1/8” NPT
6	100166	SLEEVE, 3/8” C – BRASS
7	100170	NUT, 3/8” C – BRASS
8	152701	INLET TUBE, 3/8” DIA. X 5.53” LENGTH X 90°
9	111635	HOSE CLAMP, .574” ID
10	111105	SILICONE NIPPLE
11	781171	SILICONE TANK GASKET – 23” DIA.
12	704215	MAIN THERMOSTAT – RS 4.78 ACE/FC
13	100209	THERMOSTAT CAPILLARY CLIP
14	102581-10	HEATING ELEMENT, 1100W 120V
14A	102580-10	HEATING ELEMENT, 1400W 120V
14B	100071-10	HEATING ELEMENT, 1750W 120V
14C	102850-10	HEATING ELEMENT, 3500W 240V
15	100409	BRASS GASKET, .520” ID X .811” OD X .064” THICK – TINPLATED
16	111593	HI-LIMIT THERMOSTAT, 221°F 25A
17	500039	SILICONE GROMMET, .060” DIA – SLIT
18	100269	HI-LIMIT THERMOSTAT BRACKET
19	100043	THERMOSTAT KNOB – [MAIN]
20	100190	JAM NUT, BRASS 1/2 – 20
21	108104	THERMOSTAT BRACKET – MAIN ACE SERIES
24	701942	SILICONE TUBING, 1/4" ID X 3/8” OD X 5.25” LENGTH [Alt. Number:152218 – 1/4"ID X 3/8” OD X 100’]
25	100440	HOSE CLAMP, 3/8” ID
26	102874	SILICONE TUBING, 3/8” ID X 5/8” OD X 9.0” LENGTH [Alt. Number:152213 – 3/8” ID X 5/8” OD X 100’]
27	411039	Hose Clamp, .510” ID
29	330509	“O”-RING, -010.23 X .379” EPDM A70 – BLACK
30	201112	BRASS INSERT, 1/4" ID TUBE
31	110595	SILICONE VACUUM BREAKER
32	102783	SPRAY HEAD TUBE ASSEMBLY – ACE SERIES
33	100135	BULKHEAD FITTING – SPRAY HEAD
34	102835	BULKHEAD FITTING – FAUCET
35	108248	FITTING, 1/4" NPD X 3/8” TUBE

ACE Series

Automatic Coffee Brewer: Glass Decanter, Thermal Carafe, Thermal Dispenser, & Thermal Airpot

ACE Tank Assembly, [New Style]

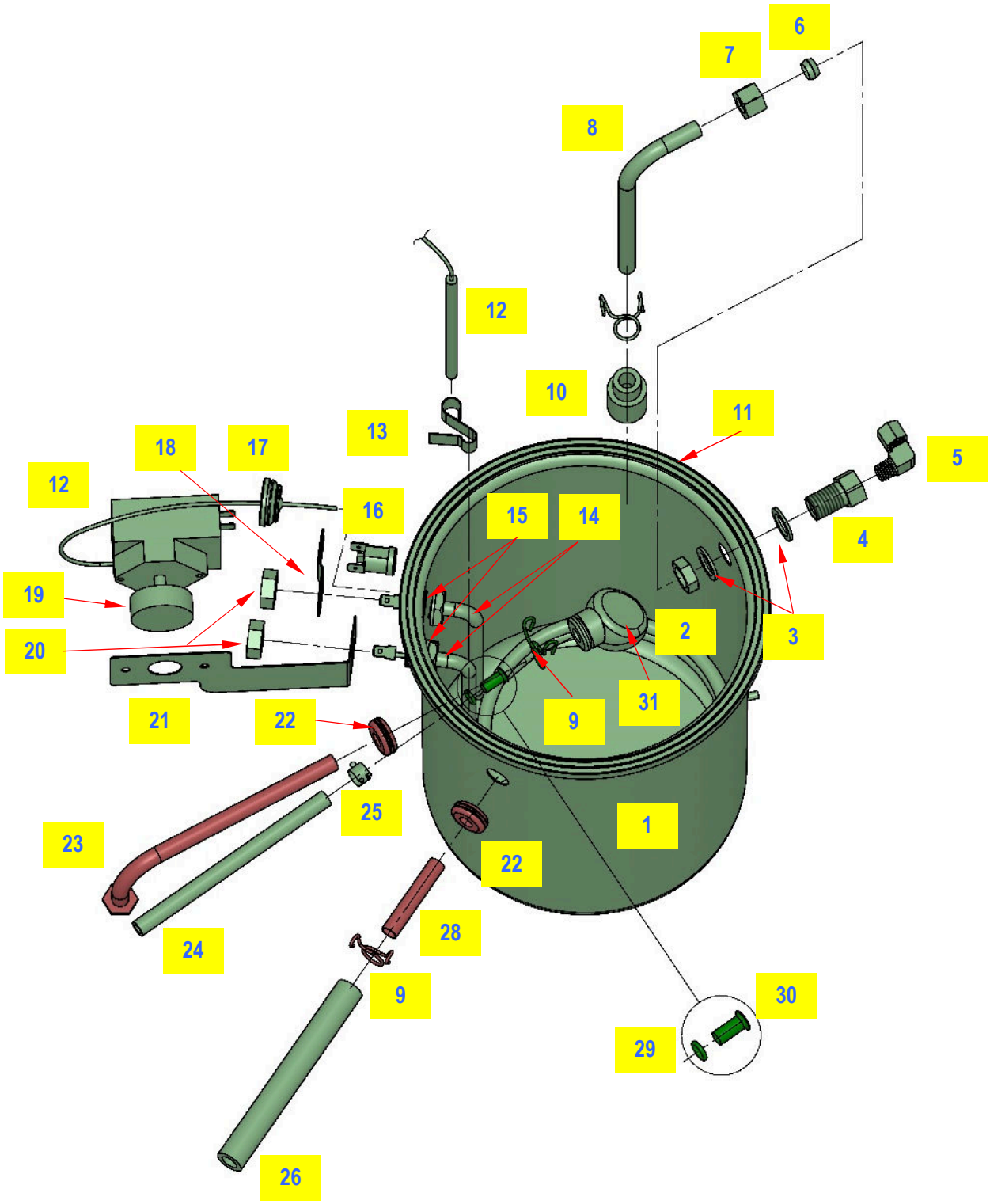

ACE Series

Automatic Coffee Brewer: Glass Decanter, Thermal Carafe, Thermal Dispenser, & Thermal Airpot

ACE Tank Assembly, [New Style]

Item	Part No.	Description
1	102797	TANK, SPOTWELD FAUCET – ACE SERIES
2	100431	NUT, 9/16-24 X 11/16” HEX
3	100030	BRASS GASKET, .566” ID X .811” OD X .064” THICK – TINPLATED
4	102831	FITTING, 3/8” C X 1/8” NPT
5	100149	MALE ELBOW, 1/4" C X 1/8” NPT
6	100166	SLEEVE, 3/8” C – BRASS
7	100170	NUT, 3/8” C – BRASS
8	152701	INLET TUBE, 3/8” DIA. X 5.53” LENGTH X 90°
9	111635	HOSE CLAMP, .574” ID
10	111105	SILICONE NIPPLE
11	781171	SILICONE TANK GASKET – 23” DIA.
12	704215	MAIN THERMOSTAT – RS 4.78 ACE/FC
13	100209	THERMOSTAT CAPILLARY CLIP
14	102581-10	HEATING ELEMENT, 1100W 120V
14A	102580-10	HEATING ELEMENT, 1400W 120V
14B	100071-10	HEATING ELEMENT, 1750W 120V
14C	102850-10	HEATING ELEMENT, 3500W 240V
15	100409	BRASS GASKET, .520” ID TIN PLATED
16	111593	HI-LIMIT THERMOSTAT, 221°F 25A
17	500039	SILICONE GROMMET, .060” DIA – SLIT
18	100269	HI-LIMIT THERMOSTAT BRACKET
19	100043	THERMOSTAT KNOB – [MAIN]
20	100190	JAM NUT, BRASS 1/2 – 20
21	108104	THERMOSTAT BRACKET – MAIN ACE SERIES
22	101938*	SILICONE GROMMET, .359” ID x .875” OD Has Been Deleted.
23	704156	SPRAY HEAD TUBE ASSEMBLY, 5.66” X 90°
24	101135	SILICONE TUBING, 1/4" ID X 3/8” OD X 6.50” LENGTH [Alt. Number:152218 – 1/4"ID X 3/8” OD X 100’]
25	100440	HOSE CLAMP, 3/8” ID
26	102874	SILICONE TUBING, 3/8” ID X 5/8” OD X 9.0” LENGTH [Alt. Number:152213 – 3/8” ID X 5/8” OD X 100’]
27	411039	HOSE CLAMP, .510” ID
28	102835*	151741 STAINLESS STEEL TUBE, 3/8” X 2.0” L Replaced by 102835 Bulk Head Faucet Outlet
29	330509	“O”-RING, -010.23 X .379” EPDM A70 – BLACK
30	201112	BRASS INSERT, 1/4" ID TUBE
31	110595	SILICONE VACUUM BREAKER
NA	100030*	Has Been Added To The ACE New Style Tank Assembly, Faucet Hole
NA	100431*	Has Been Added To The ACE New Style Tank Assembly, Faucet Hole

ACE Series

Automatic Coffee Brewer: Glass Decanter, Thermal Carafe, Thermal Dispenser, & Thermal Airpot

Additional Replacement Parts

Electrical Components		
Part No.	Description	Image
100010	Warming Plate Assembly, Black 100W 120V	
100187	Warming Element, 100W 120V	
100071	Main Heating Element, 1750W 120V	
102581	Main Heating Element, 1100W 120V	
102580	Main Heating Element, 1400W 120V	
102850	Main Heating Element, 13500W 240V	
704215	Main Thermostat, RS 4.78 ACE/FC	
111593	Manual Thermostat, Hi-Limit Vertical Tabs 221F 25A	

ACE Series

Automatic Coffee Brewer: Glass Decanter, Thermal Carafe, Thermal Dispenser, & Thermal Airpot

Additional Replacement Parts

Electrical Components		
Part No.	Description	Image
100085	Lighted Rocker Switch, Red 120V	
201985	Start Switch, Black *Used in ACE-LD, ACE-D, ACE-AP, ACE-S, ACE-TC, and ACE-LP*	
108045	Start Switch, Red *Used in ACE-TS*	
102775	Lamp, Green – "Ready" Amber – "Brew" 120V [pkg. – 2 lamps] *Used in ACE-LD, ACE-D, ACE-AP, ACE-S, ACE-TC, and ACE-LP*	
102884	Lamp, Red – "Heating" Amber – "Brew" 120V [pkg. – 2 lamps] *Used in ACE-TS*	
102862	Micro Switch & Bracket Assembly	
102841	Micro Switch with Offset	
121723	Super ACE Control Board Assembly [Non – Telescoping]	
111725	ACE Telescoping Control Board Assembly, 120V/240V	

ACE Series

Automatic Coffee Brewer: Glass Decanter, Thermal Carafe, Thermal Dispenser, & Thermal Airpot

Additional Replacement Parts

Electrical Components		
Part No.	Description	Image
100500	On/Off Rocker Switch, Black	
Brew Baskets		
Part No.	Description	Image
110985	Brew Basket Assembly, BW Mod Vac Black	
201954	Brew Basket Assembly, Filter Pak 2 Holes Black Trimmed & Notched	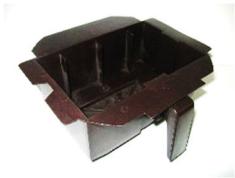
102800	Brew Basket Rail, Left-hand ACE	
102799	Brew Basket Rail, Right-hand ACE	
102370	Brew Basket Small, Coffee .170” Hole SS	
104010	Brew Basket Rail, Right-hand ACE [Small SS Basket 102730]	
104011	Brew Basket Rail, Left-hand ACE [Small SS Basket 102730]	

ACE Series

Automatic Coffee Brewer: Glass Decanter, Thermal Carafe, Thermal Dispenser, & Thermal Airpot

Additional Replacement Parts

Tank and Plumbing		
Part No.	Description	Image
104012	Tank Lid Assembly, ACE Series	
781181	Tank Silicone Gasket, 23”	
100024	5 Hole Spray Head , SS	
102820	S-45 Solenoid Valve Assembly, ACE .250 GPM	
102780	S-45 Solenoid Valve Only, ACE	
201158	Solenoid Repair Kit, [102780]	
790019	Nylon Gasket, Flow control	
100290	Flow Control Washer, .250 GPM Red	

ACE Series

Automatic Coffee Brewer: Glass Decanter, Thermal Carafe, Thermal Dispenser, & Thermal Airpot

Additional Replacement Parts

Tank and Plumbing		
Part No.	Description	Image
100250	Solenoid Valve, Skinner	
102770	Faucet with Red Handle	
102268	Seat Cup, Faucet	
100025	Spray Head Gasket	
Legacy Style Tank Assemblies [Old Style]		
102798	Tank Assembly, 1400W 120V – ACE Series	
102859	Tank Assembly, 1750W 120V – ACE Series	
102746	Tank Assembly, 3500W 120V – ACE Series	
110305	PDS Valve Assembly, Low Flow RED FL x PL LB	

ACE Series

Automatic Coffee Brewer: Glass Decanter, Thermal Carafe, Thermal Dispenser, & Thermal Airpot

Additional Replacement Parts

Tank Assemblies [New Style]		
Part No.	Description	Image
107987	Tank Assembly ACE, 1750W [K107995]	
107986	Tank Assembly ACE, 1400W [K107995]	
107985	Tank Assembly ACE, 3500W [K107995]	
330538	SPDS, Low Flow – Red	
Miscellaneous Parts		
100078	Bumper Foot with Screw	
500350	Grommet, Probe, Bushing 5/16”	
500396	Probe, 1.537” & Bushing Assembly	
201173	Spray Head Nut	

ACE Series

Automatic Coffee Brewer: Glass Decanter, Thermal Carafe, Thermal Dispenser, & Thermal Airpot

Additional Replacement Parts

Tank Assemblies [New Style]		
Part No.	Description	Image
152207	Plug, Tank Cover Natural Silicone	

MISCELLANEOUS FIGURES:

Valve Section View

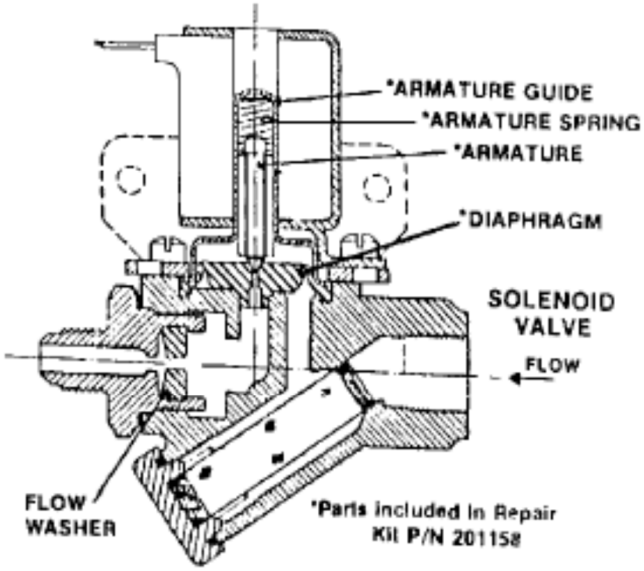
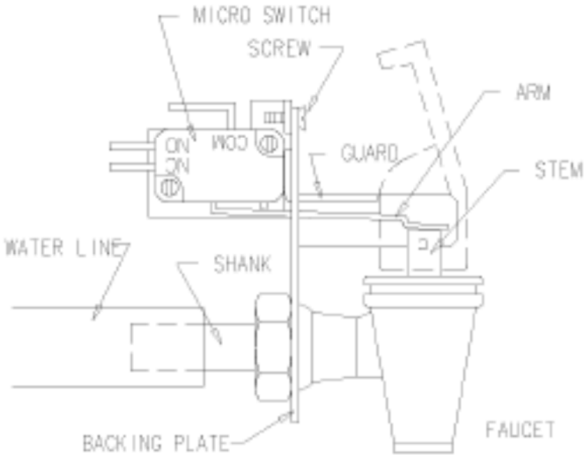
Micro Switch Section View