# BENQ_RD320UA
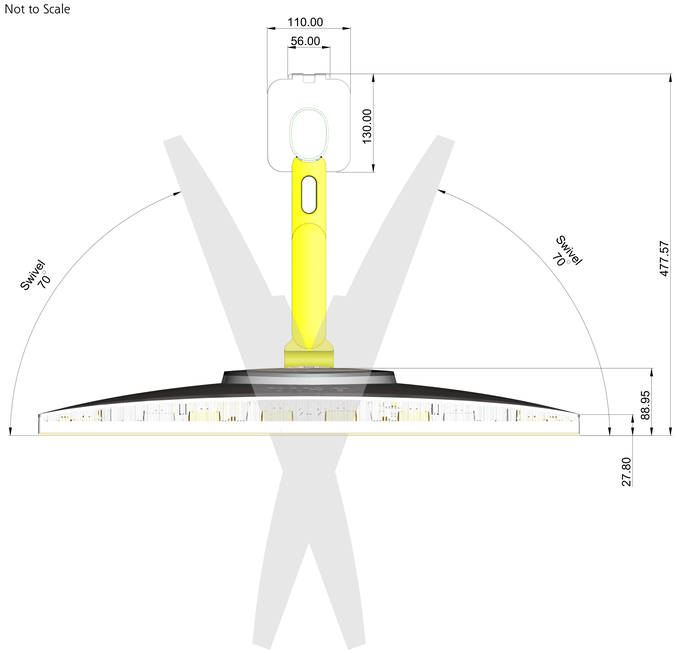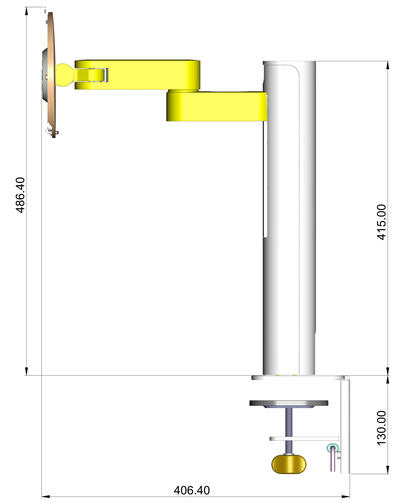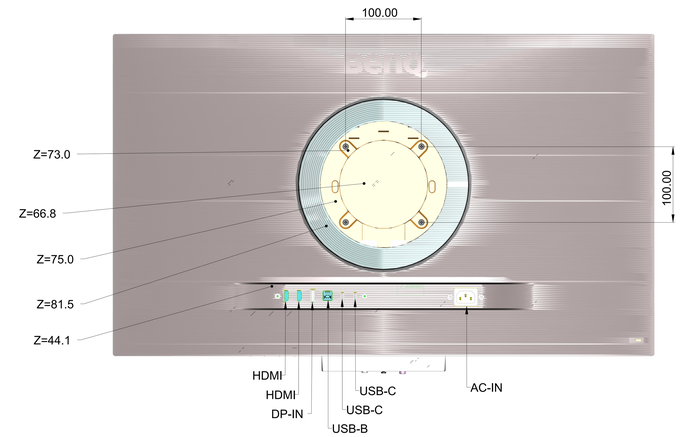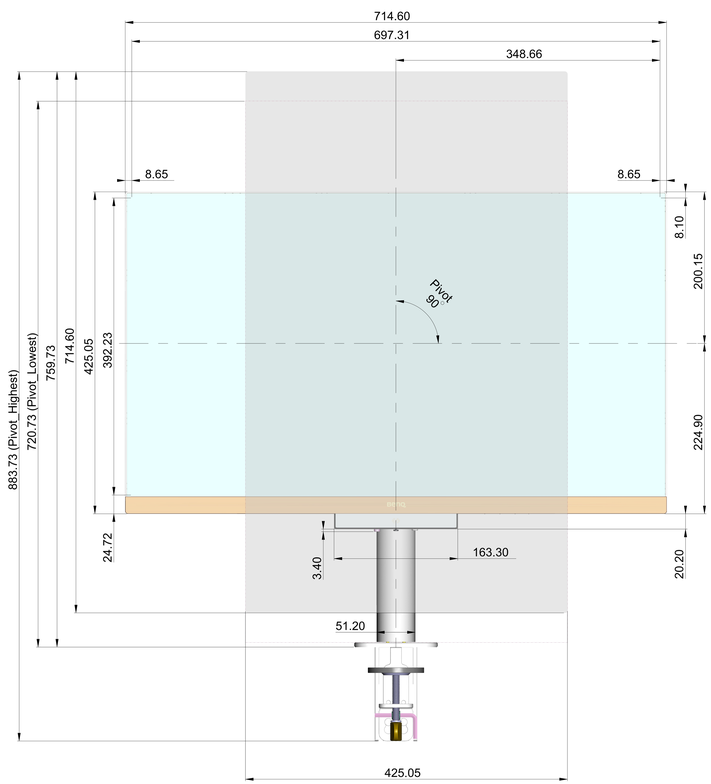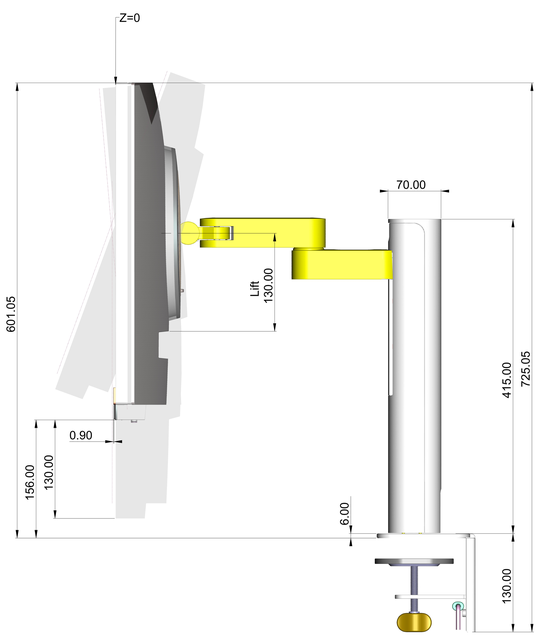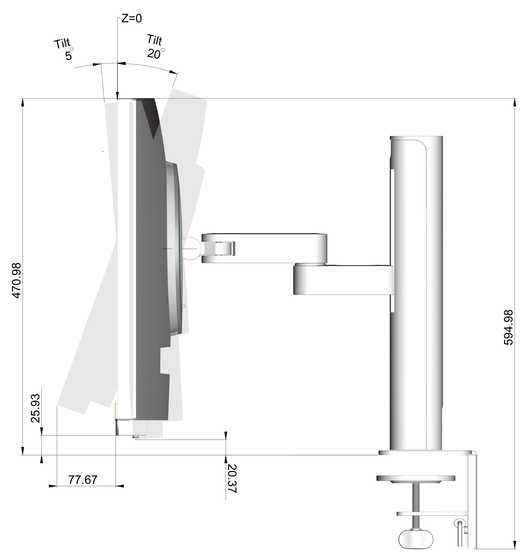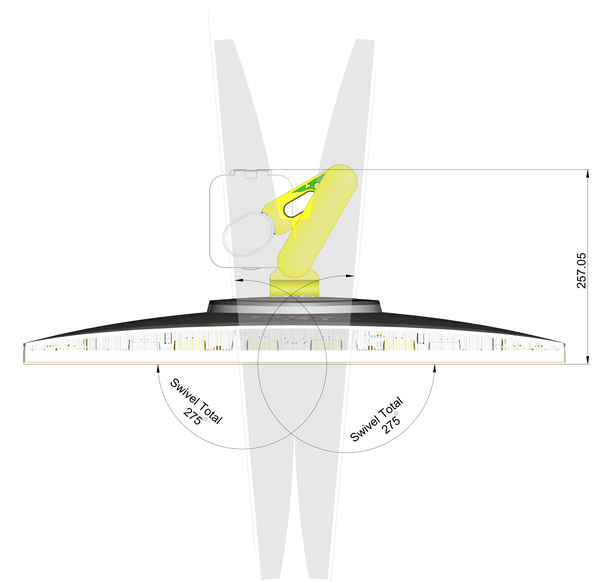
Unit : mm
Dimension : Norminal
Drawing : Not to Scale